SHOW PART NR. AREA MARKED X (INCLUDE DASH NR. & REVISION LTR.)

Model: 5030-01-800

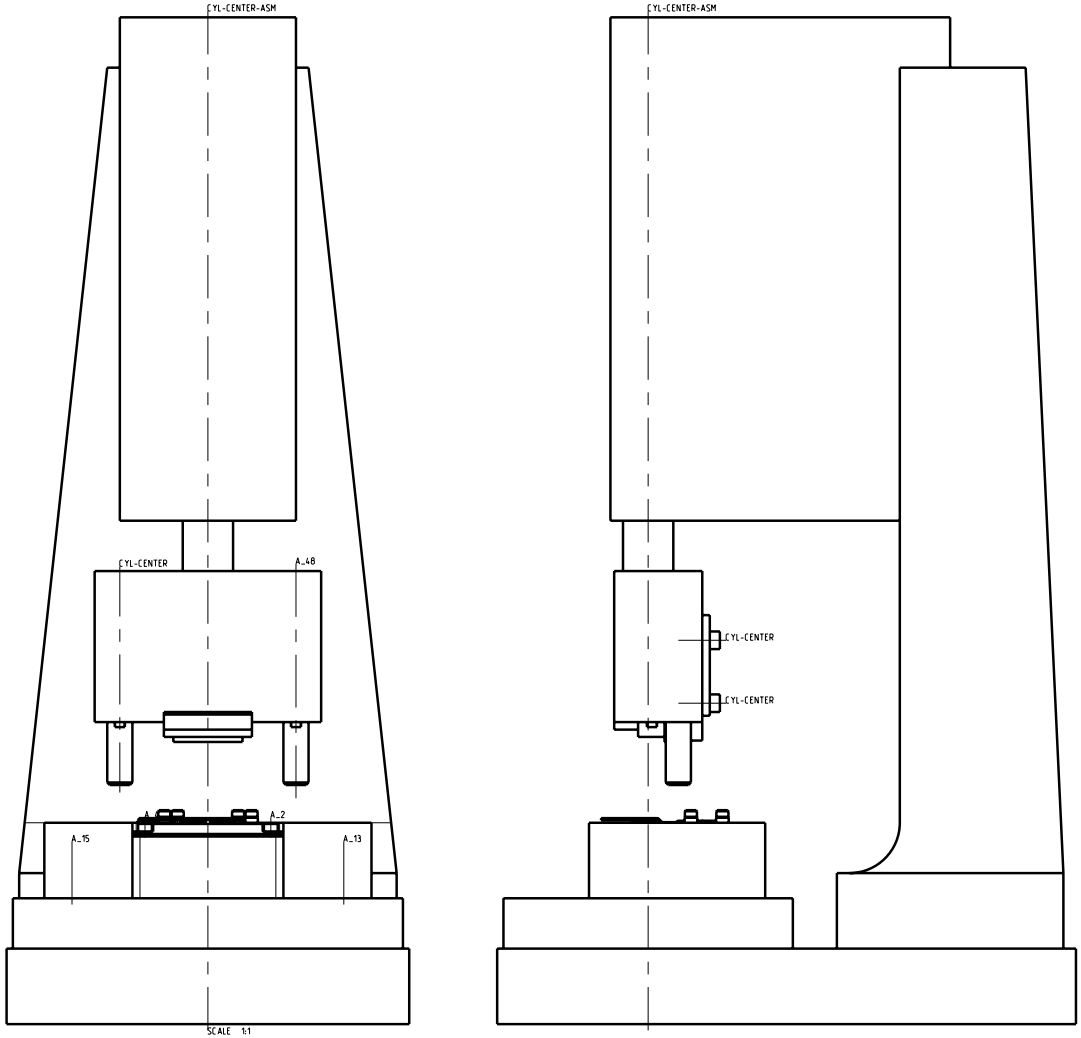


SCALE 1:1

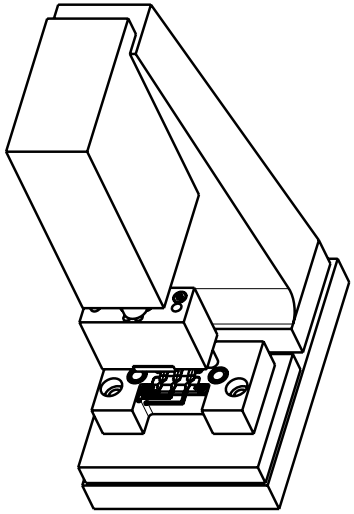

SCALE 1:2

THIS DRAWING IS A CONTROLLED DOCUMENT FOR DYMO ENGINEERING B.V. IT IS SUBJECT TO CHANGE WITHOUT PRIOR NOTICE. ALL PARTIES USING THIS DRAWING SHOULD BE CONTACTED FOR THE LATEST REVISION.

THIS INFORMATION IS CONFIDENTIAL AND IS DISCLOSED TO YOU IN ACCORDANCE WITH THE DISCLOSURE AGREEMENT. IT MAY NOT BE TRANSMITTED TO OTHER THAN DYMO PERSONNEL WITHOUT WRITTEN AUTHORIZATION FROM DYMO ENGINEERING B.V.

| REVISION DESCRIPTION | | | REVISED BY | REVISION DATE |
|---|---|---|---|---|
| MATERIAL | WST.NR. | FINISH/TREATMENT | REMARKS | UNLESS OTHERWISE SPECIFIED DIMENSIONS IN MM |
| TITLE | | | DRAWN BY / DATE | ± 0.2 / .X ± 0.1 / .XX ± 0.05 / .XXX ± 0.025 REMOVE BURRS ANGLE ± 0° 30' |
| modificatie pers | | | RELEASE LEVEL | PROJECTION 21 / SCALE 1:2 / SIZE A1 |
| DYMO Engineering B.V. Kantwijk 44A 5216 AC Bergeyk (N-Br.) www.dymoengineering.nl | | | DWG. NR. 5030-01-800 | SHEET 4 OF 4 / REV |