SHOW PART NR. AREA MARKED X (INCLUDE DASH NR. & REVISION LTR.)

Model: 5030-01-800

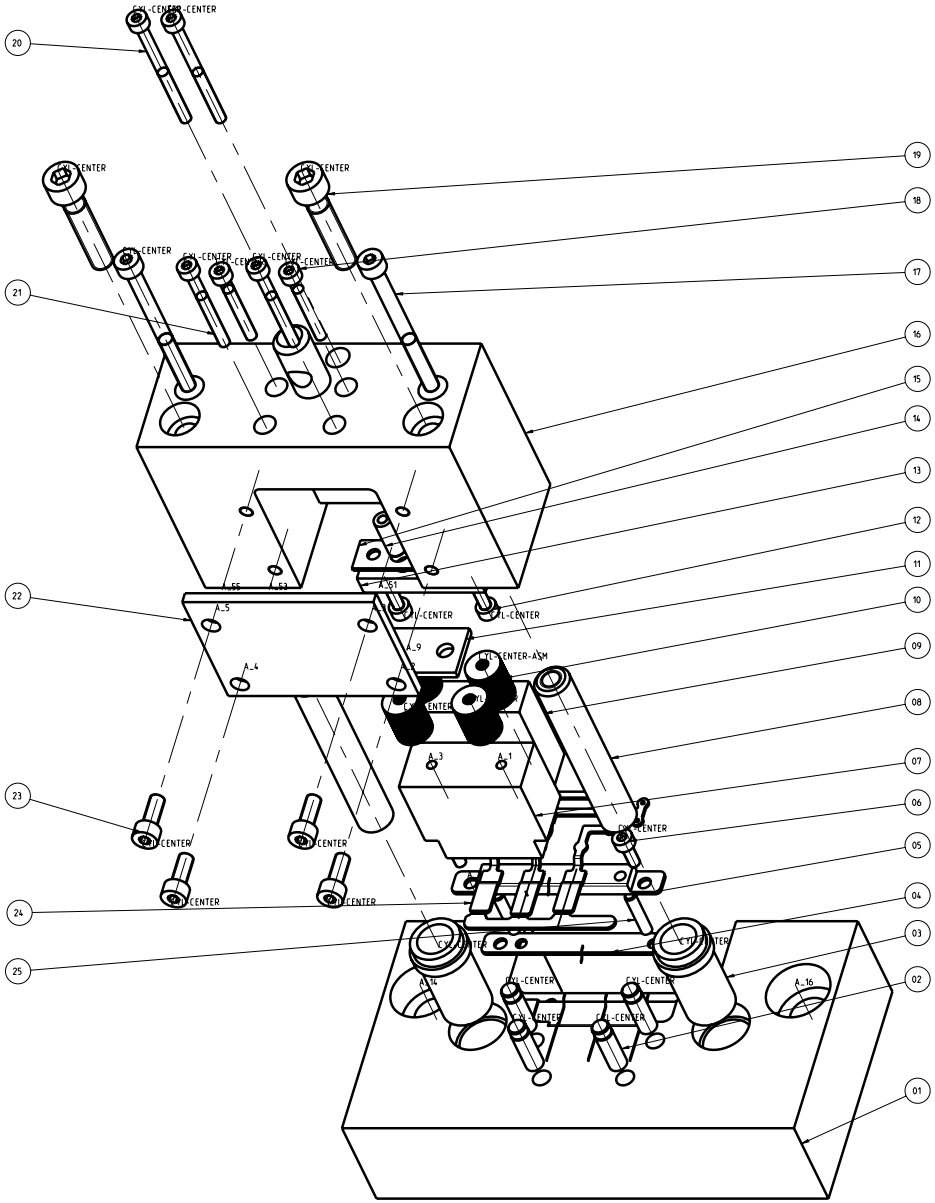

SCALE 3:2

POS.	QTY	NAME / NUMBER	DESCRIPTION
25	02	POSITION PIN CUT PLATE	5030-01-8..
24	01	CONNECTOR	
23	04	BOLT	M4x10- 10.9-ISO 4762
22	01	HOLD PLATE	5030-01-8..
21	02	BOLT	M3x30- 10.9-ISO 4762
20	02	BOLT	M3x40- 10.9-ISO 4762
19	02	BOLT	M6x30- 10.9-ISO 4762
18	02	BOLT	M3x25- 10.9-ISO 4762
17	02	BOLT- STROKE STOP	M4x50- 10.9-ISO 4762
16	01	STAMP HOUSE	5030-01-8..
15	01	SHIM PLATE STAMP	5030-01-8..
14	02	POSITION PIN CUT PLATE	5030-01-8..
13	01	SHIM CUT PLATE	5030-01-8..
12	02	BOLT	M3x10- 10.9-ISO 4762
11	01	PLATE SPRING	5030-01-8..
10	80	DISC SPRING	ALCOMEX VEREN TYPE: S22080
09	01	MODIFICATION STAMP	5030-01-8..
08	02	STAMP POSITION PIN	HASCO Z02/10x60 ????
07	01	FIXATION STAMP	5030-01-8..
06	02	BOLT	M3x8- 10.9-ISO 4762
05	01	CUT PLATE	5030-01-8..
04	01	SHIM CUT PLATE	5030-01-8..
03	02	GLYDING BUSH	SANKYO SOSG 10022
02	04	POSITION PIN	5030-01-8..
01	01	STAMP SUPPORT	5030-01-8..

THIS DRAWING IS A CONTROLLED DOCUMENT FOR DYMO ENGINEERING B.V. IT IS SUBJECT TO CHANGE WITHOUT PRIOR NOTICE. ALL PARTS MADE FROM THIS DRAWING SHOULD BE CONFORMED TO THE THE LATEST REVISION.

THIS INFORMATION IS CONFIDENTIAL AND IS TO BE USED TO THE MUTUAL BENEFIT OF DYMO ENGINEERING B.V. IT MAY NOT BE PASSED ON TO OTHER THAN DYMO PERSONNEL WITHOUT WRITTEN AUTHORIZATION FROM DYMO ENGINEERING B.V.

REVISION DESCRIPTION			REVISED BY	REVISION DATE
MATERIAL	WST.NR.	FINISH/TREATMENT	REMARKS	UNLESS OTHERWISE SPECIFIED DIMENSIONS IN MM
TITLE			DRAWN BY / DATE	1 ± 0.2 10 ± 0.1 30 ± 0.25 100 ± 0.05 REMOVE BURRS ANGLE ± 0° 30'
modificatie pers			RELEASE LEVEL	PROJECTION / SCALE 2:1 / SIZE A1
DYMO	DYMO Engineering B.V. Kantwijk 44A 5216 AC Bergeijk (N-Br.) www.dymoengineering.nl		DWG. NR. 5030-01-800	SHEET 3 OF 4 / REV