R.L. Ver.

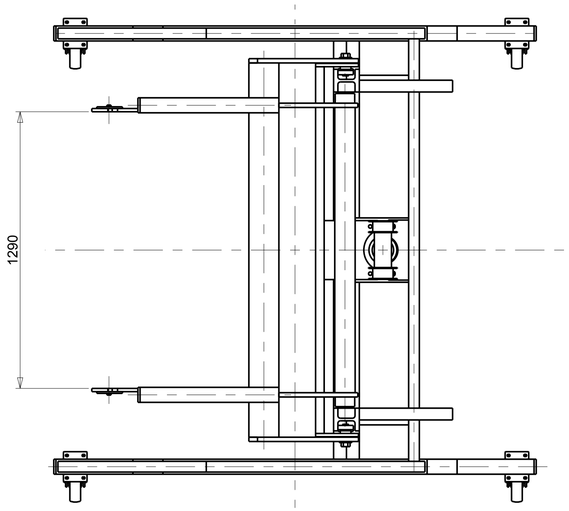

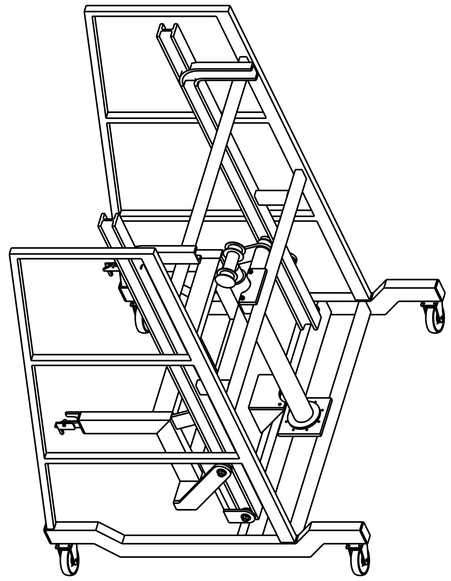

SCALE 1:20

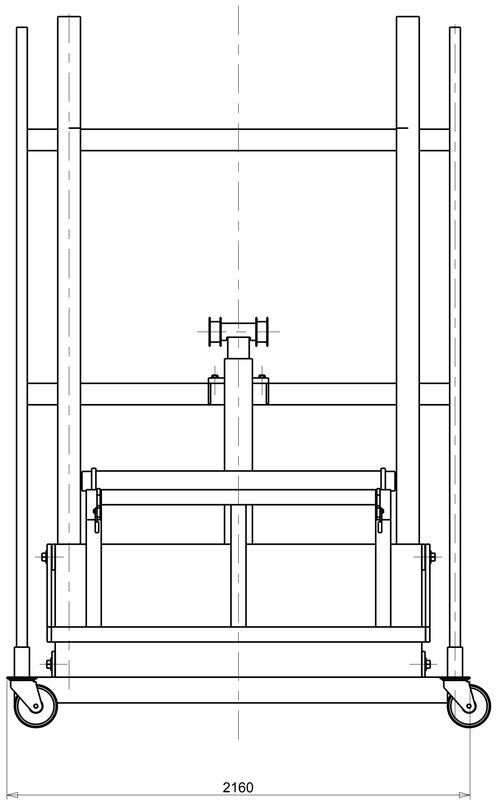

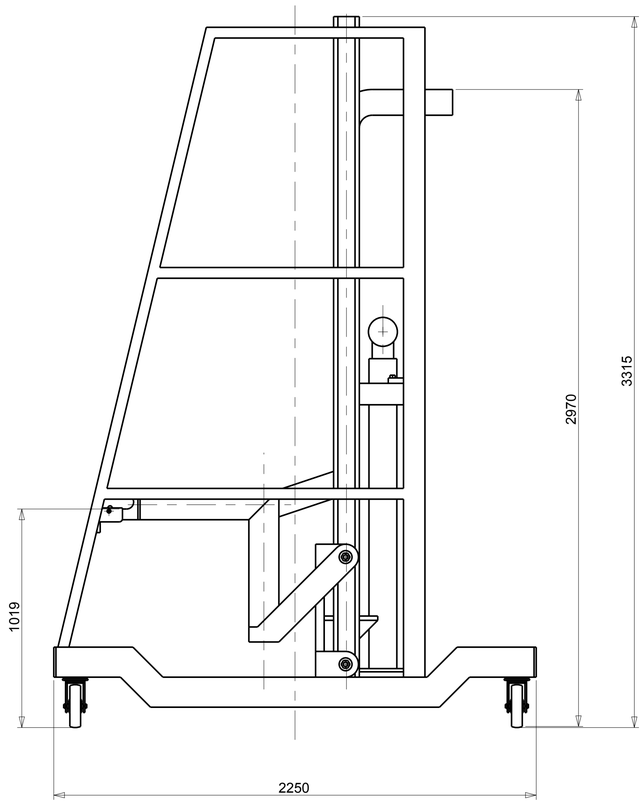

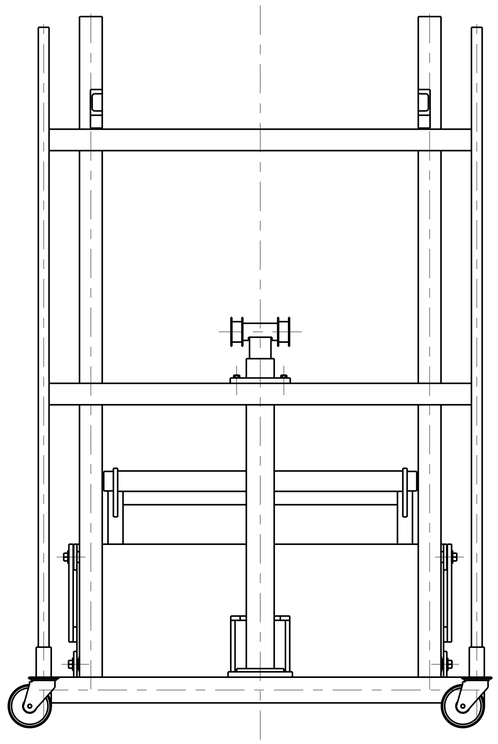

Massa = 1406 kg

RevNo	Revision note	Date	Checked		Drawn	

Client	Client Reference	Date	Drawn	Scale
.		28-Mei-10	JoMa	7:100

Project Name: File Name
Papiercontainer lift
2010013_01

GEFFEN PRODUCTS

Ladonkseweg 6
NL-5281 RN Boxtel
Tel:+31 (0)411-688571
Fax:+31 (0)411-601462

Rev 00 | Sheet 1 / 1 | A1

PROPERTY OF GEFFEN PRODUCTS BOXTEL NETHERLANDS
REPRODUCTION, OR DISCLOSURE TO THIRD PARTIES IN
ANY FORM WHATSOEVER, NOT ALLOWED WITHOUT
WRITTEN CONSENT OF THE PROPRIETORS.

EIGENDOM VAN GEFFEN PRODUCTS BOXTEL.
VERMENIGVULDIGING OF MEDEDELING AAN DERDEN
IN WELKE VORM DAN OOK, IS ZONDER SCHRIFTELIJKE
TOESTEMMING VAN EIGENARES NIET GEOORLOOFD.